UNIVERSITY OF BIRMINGHAM
University of Birmingham Research at Birmingham

Influence of shear bolt connections on modular precast steel-concrete composites for track support structures

Mirza, Olivia ; Kaewunruen, Sakdirat

License:
None: All rights reserved

Document Version
Peer reviewed version

Citation for published version (Harvard):
Mirza, O & Kaewunruen, S 2018, 'Influence of shear bolt connections on modular precast steel-concrete composites for track support structures', *Steel & Composite Structures: an international journal*, vol. 27, no. 5, pp. 647-659.

Link to publication on Research at Birmingham portal

Publisher Rights Statement:
Final Version of Record published by Steel and Composite Structures as detailed above

General rights
Unless a licence is specified above, all rights (including copyright and moral rights) in this document are retained by the authors and/or the copyright holders. The express permission of the copyright holder must be obtained for any use of this material other than for purposes permitted by law.

•Users may freely distribute the URL that is used to identify this publication.
•Users may download and/or print one copy of the publication from the University of Birmingham research portal for the purpose of private study or non-commercial research.
•User may use extracts from the document in line with the concept of 'fair dealing' under the Copyright, Designs and Patents Act 1988 (?)
•Users may not further distribute the material nor use it for the purposes of commercial gain.

Where a licence is displayed above, please note the terms and conditions of the licence govern your use of this document.

When citing, please reference the published version.

Take down policy
While the University of Birmingham exercises care and attention in making items available there are rare occasions when an item has been uploaded in error or has been deemed to be commercially or otherwise sensitive.

If you believe that this is the case for this document, please contact UBIRA@lists.bham.ac.uk providing details and we will remove access to the work immediately and investigate.

Download date: 25. Apr. 2024

Influence of shear bolt connections on modular precast steel-concrete composites for track support structures

Olivia Mirza[1a] and Sakdirat Kaewunruen[*2b]

[1]*School of Computing, Engineering & Mathematics, University of Western Sydney, Kingswood, NSW 2747 Australia*
[2]*Birmingham Centre for Railway Research and Education, School of Civil Engineering, The University of Birmingham, Edgbaston, B15 2TT, UK*

(Received keep as blank , Revised keep as blank , Accepted keep as blank)

Abstract. Through extensive research, there exist a new type of connection between railway bridge girders and steel-concrete composite panels. In addition to conventional shear connectors, newly developed blind bolts have been recently adopted for retrofitting. However, the body of knowledge on their influence and application to railway structures has not been thoroughly investigated. This study has thus placed a particular emphasis on the application of blind bolts on the Sydney Harbour Bridge as a feasible alternative constituent of railway track upgrading. Finite element modeling has been used to simulate the behaviours of the precast steel-concrete panels with common types of bolt connection using commercially available package, ABAQUS. The steel-concrete composite track slabs have been designed in accordance with Australian Standards AS5100. These precast steel-concrete panels are then numerically retrofitted by three types of most practical bold connections: head studded shear connector, Ajax blind bolt and Lindapter hollow bolt. The influences of bolt connections on load and stress transfers and structural behaviour of the composite track slabs are highlighted in this paper. The numerical results exhibit that all three bolts can distribute stresses effectively and can be installed on the bridge girder. However, it is also found that Lindapter hollow bolts are superior in minimising structural responses of the composite track slabs to train loading.

Keywords: steel-concrete composites; railway track slabs; track support structures; modular precast composites; bolt connections

1. Introduction

Sydney Harbour Bridge (SHB) has and always will remain Australia's most identifiable and iconic symbol. Its glorifying size and appearance attracts many individuals from around the world and is even known to inspire engineers and architect for their future designs. Its enormous arches remain appealing to many and mark one of the first truly successful engineering projects in Australia. Its symbolism in regards to the achievements of the citizens of this country that dates back for more than 80 years remains remarkable. SHB has been built to accommodate road and rail traffics. Dual tracks on timber transom bridge have been installed

*Corresponding author
[a] Ph.D., Senior Lecturer in Civil Engineering, E-mail: o.mirza@westernsydney.edu.au
[b] Ph.D., CPEng., Senior Lecturer in Railway and Civil Engineering, E-mail: s.kaewunruen@bham.ac.uk

for passenger rails for over 20 years. Such components of railway track system are inextricably designed to interact in order to transfer the dynamic loads induced by wheel/rail interface onto the support structure of the rail track (Remennikov and Kaewunruen, 2008; 2014; Remennikov et al., 2012). These dynamic loads include both vertical loads influenced by the unsprung mass of the vehicles and lateral loads mobilized by centrifugal action of cornering or the momentum of breaking vehicles (Griffin et al., 2014; 2015). Dependent to curve radii, the lateral loads are often counter-balanced or mitigated to an extent by track superelevation (or track cant). Based on the current asset management strategy, the actual life span of timber components subjected to aggressive rail dynamics is around 10-20 years (Micenko, 2014; Kaewunruen, 2014; Kimani and Kaewunruen, 2017; Kaewunruen and Kimani, 2017). This causes frequent maintenance and the need for maintainability and practicality in design and material choices. Fig. 1 shows road and railway infrastructures (i.e. railway transom bridge) with existing physical constraints on SHB. The rail track is built on timber cross beams, so-called 'transoms', which are supported by long-span steel girders between bridge piers (Shanmuganathan et al., 2011).

a) artistic view

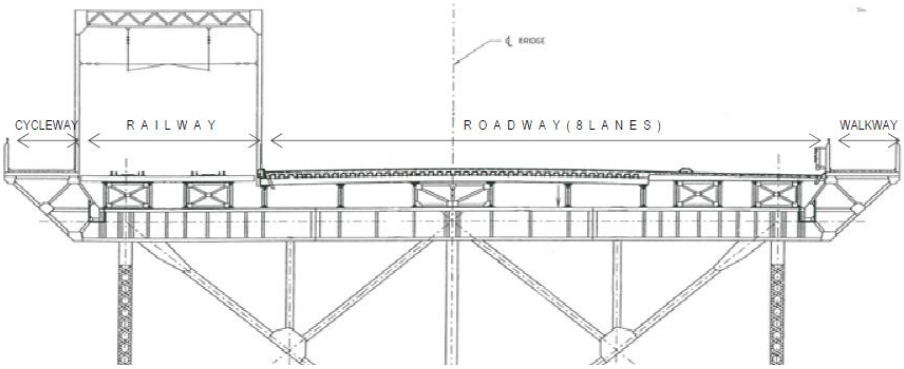

b) Cross section showing the current configuration

Fig. 1 Sydney Harbour Bridge (SHB)

There has been significant attempt to upgrade railway transom bridges using direct-fixation track slab technology (Griffin et al., 2014; Mirza et al., 2016). The design methodology and procedure for track slabs generally yields heavy concrete slabs with a thickness of over 220mm, especially for heavy axle trains (>25t axle load). This thick slab causes clearance issues for corridor design, kinematic envelop and transit spaces

(Kaewunruen et al., 2014; Li et al., 2012; 2014). Recent advancement in steel-concrete composite technology has led to the development of precast and modular composite track slabs. Its design and performance evaluations suggest that the modular composite track slabs can reduce the component weight by 10 –25% (Griffin et al., 2015; Lezgy-Nazargah and Kafi, 2015; Kaewunruen et al., 2018). However, with the new development of more-practical and industry ready connection bolts, it is inevitable to investigate the performance and interaction of the composite slabs and different types of connections between a composite panel and bridge support girders. Accordingly, this paper highlights the structural behaviour and influence of different types of bolt connections on the composite track slabs. Three types of bolt connections have been considered i.e. conventional shear connectors, Ajax blind bolt and Lindapter hollow bolt. Each type of bolt has different benefits in terms of constructability, maintainability and practicality. Numerical simulations using a commercial package, ABAQUS, are carried out for the investigations. This study provides better insight into the influence of connection bolts on structural responses of composite slabs, which will assist track engineers in design and adoption of composite technology for railway industry applications.

2. Shear Bolt Connections

Partial reconstruction of railway bridges is used as an alternative to completely demolishing a bridge and rebuilding it. As a bridge is used increasingly over a long period of time, its original design specifications may not be strong enough to sustain extra load. In real life, the cost associated with demolishing and rebuilding a railway bridge with stronger design specifications being extremely expensive. As such, track reconditioning by replacing old and decayed timber transoms with new ones can often be seen. Alternative utilisation of composite slabs implies that connection between bridge girders and each composite slab must be designed to ensure strength and serviceability. The common type of bolt connection used for composite structures is the shear headed stud. However, recent adoption of new innovative types of one sided bolts such as Ajax and Lindeapter bolts prompts the need to consider those possibilities for use in railway tracks.

2.1 Shear Connectors

Shear connectors are used to connect two elements in order to provide shear transfer between these elements in the contact plane while preventing any out-of-plane separation. There are many types of shear connectors available. Headed stud shear connectors are the most common connectors used in steel-concrete construction. The strength of the headed stud is determined by its height, diameter and strength. Other factors affecting the strength of the bolt include the concrete environment around the bolt, the concrete properties and the reinforcement detailing. The headed stud shear connectors consist of a shank, head and a weld collar, which can be seen in Fig. 2a. The strength and performance of stud shear connectors is proven for designs with diameters up to 25mm (Hendy 2006). Stud shear connectors are designed to resist shear at the steel-concrete interface. The shear stud connectors are welded to flanges of steel sections or steel beams which are fixed into concrete. They have efficient strength with concrete in compression along with efficient strength with steel in tension (Mirza and Uy 2011; Kirkland and Uy, 2015). The connectors make the most efficient use of the concrete and steel properties. The studs are used to transfer longitudinal shear forces across the steel-concrete interface (Lam & El-Lobody 2005). However, the process could create a safety hazard during the construction stage such as welding, working at height, working with existing structure, and so on. In such case, other types of connections are preferred. Headed stud shear connectors have appropriate deformation capacity with their mechanical behaviour considered ductile. The connectors allow inelastic distribution of shear forces between each other (Vayas 2013; Pecce et al. 2012).

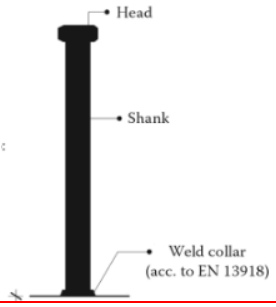

(a) Headed stud dimensions
(the stud diameter can vary from 5-25mm)

(b) Headed shear stud connectors

(c) Concrete cone failure

(d) Shear stud failure

Fig. 2 Headed stud shear connector

Push tests are conducted to study the behaviour of shear connectors. They predict the ability of shear connectors to resist longitudinal forces between concrete and steel (Mirza et al. 2010). Push tests are a substitute method to full scale composite beam tests which are much more expensive and time consuming (Fanaie et al. 2015). Typical push test specimens are created by welding shear connectors to the flange of an I-beam steel section. Mirza et al. (2010) studied the behaviour and strength of three types of shear connectors through conducting push tests. The study focused on headed stud shear connectors, AJAX one side bolts and Lindapter Hollow Bolts. The push tests were designed according to Eurocode 4 push tests. The study concluded that AJAX bolts behaved better than Lindapter bolts in terms of ultimate strength, stiffness and ductility (Mirza et al. 2010). These results show that AJAX blind bolts are more suitable for the construction of portable structures. Stud failures can occur under static loading or cyclic loading. Structures, which are subjected to dead, live and imposed loads experience static failures. Structures affected by cyclic loading such as wind and waves experience other types of failure. Stud shear connections, which undergo static load can fail in four different modes.

Failure of the stud can result in fracture of the shank, failure of the slab by splitting, failure of the slab by shear or failure of the slab by embedment (Dj & L 1985). Lam and El-Lobody (2001) performed push tests and produced a finite element model predicting three methods of failure for head shear connectors. Lam and El-Lobody (2001) concluded that failures of the push test consist of: concrete cone failure, stud connector failure or combined failure of both the concrete and steel. Concrete cone failure is when the concrete fails in compression before the stud yields forming a cone in the thickness of the concrete. Fig. 2c shows a typical 45 degree cone failure. Stud connector failure occurs when the stud reaches its maximum yield stress while there is no failure in the concrete (see Fig. 2d). Combined failure occurs when both the elements, steel and concrete, have reached their maximum yield stress and failed.

2.2 Blind Bolts

Blind bolts have been developed for structural joints where the access is limited to just one side. Blind bolts are used in these cases for connections of structural hollow sections. The Lindapter Hollow-Bolt and AJAX ONESIDE Bolt are examples of different blind bolts.

2.2.1 Lindapter hollow-bolt

The Lindapter Hollow-Bolt is a blind bolt, which is a cost effective connection for structural hollow sections. The bolt connects these hollow sections to other members (Trebilcock 2004). It is extremely convenient as it only requires access to one side of the steel. This is very effective for structures such as bridges where it becomes difficult and hazardous when bolts need to be installed from beneath the bridge as well as above. This can be avoided with the use of the Lindapter Hollow-Bolt. It can be installed by inserting the fastener into a hole, which has been pre drilled. It is then tightened with a torque wrench or by a spanner. There are multiple advantages of the Lindapter Hollow-Bolt. It requires no welding, quick and simple installation process and the bolt has been fully tested both under tensile and shear conditions (Trebilcock 2004). The bolt also has its disadvantages. The bolts hole is much larger than other bolt connection. The bolt cannot be undone once it is installed. It also has a lower capacity for shear and tension when compared to other bolts (Trebilcock 2004).

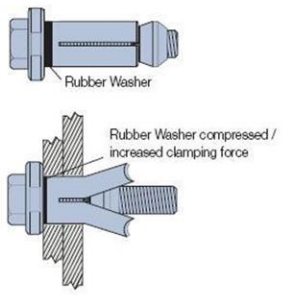

(a) Hollow-bolt mechanism

(b) Lindapter Hollow-Bolt

Fig. 3 Hollow bolt

2.2.2 Ajax one side bolt

The AJAX ONESIDE bolt is an Australian invention. The design consists of a bolt with a circular head, a stepped washer, a split stepped washer and a standard nut (Yao, Goldsworthy & Gad 2008). The bolt and nut have been designed with performance standards, which meet AS4100 (International Symposium on Tubular 2009). This blind bolt design is installed in a simple and effective way reducing onsite labour requirements making it cost effective (Yao, Goldsworthy & Gad 2008). The AJAX ONESIDE bolt can be installed from one side of the material by drilling an oversized hole followed by using a simple tool, which requires no skilled labour. This makes them very effective in instances where there is limited access to one side of a joint. ONESIDE blind bolts achieve full structural strength in tension while suiting AS4100 (Yao, Goldsworthy & Gad 2008). The bolts can be re adjusted, re tightened and re used. The bolts have their design limitations as the design requires a minimum bolt length and minimum cavity space length. These minimum requirements are larger than other bolt designs. Larger holes are also required to be made in member when compared to other bolts. One of the largest applications of the AJAX ONESIDE bolt design can be seen on many communication towers in the USA since 2003. This bolt was effective in communication towers as modifications could be made without interrupting the antenna as no welding is required with the installation of the ONESIDE. The bolt has also been used in bridge maintenance in Australia where access is limited to one side or one end.

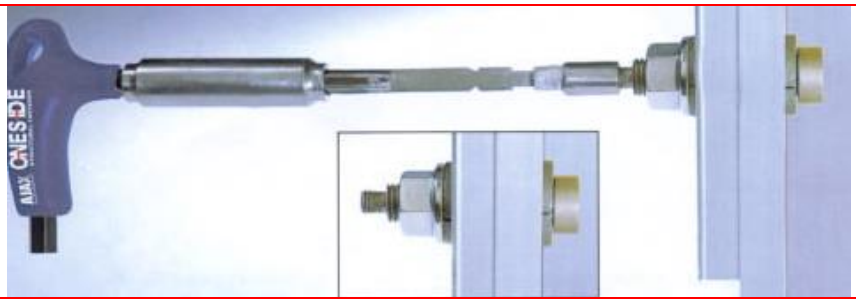

Fig. 4 Ajax one-side bolt

3. Finite Element Modelling

The railway system of the Sydney Harbour Bridge consists of two railway lines, these lines are called the North Shore Lines. One line travels from the north into the CBD and the other line travels north out of the CBD. The railway lines sit on the western end of the bridge as can be seen in Fig. 1b. The railway lines are used both for passenger carrying trains and freight carrying trains. The Sydney Harbour Bridge Railway system is made up of timber sleepers held by girders and steel rail stringers. The bridge structure is solid except for in the rail corridor, which has caused numerous problems including resilience of the structure. It has since been proposed that the sleepers be replaced with a solid slab (Shanmuganathan et al. 2011). In order for the replacement to take place certain factors have to be considered including minimal disturbance to traffic. There are many problems that arise with the use of timber sleepers for railway support. Approximately 29 percent of timber sleepers currently in use in Australia need to be replaced (Crawford 2009). On top of this large replacement percentage, many other sleepers are quickly deteriorating and can no longer perform to their required level. In some rail lines entire systems need to be replaced. Australia replaces a total of approximately two and a half million sleepers every year (Manalo et al. 2010). In Australia 25 to 30 percent of money spent by the railway industry is spent on the replacement of these timbers. The demand for the sleepers is usually higher then supply for the sleepers so new materials are being investigated as possible long term replacements for the sleepers. Possible replacement materials are steel and concrete (Manalo et al. 2010). Of course replacement materials also have negative repercussions like concrete producing more greenhouse gases during production than timber. Sleeper replacements can yield significant negative effects including large emissions of greenhouse gases. Most of these emissions are produced during the production phase of sleeper installation. Other areas where large emissions occur are, during the logging of the wood and the transportation of the wood (Crawford 2009).

It is suggested that the timber sleepers currently in use on the railway lines on the Sydney Harbour Bridge be replaced. Numerical exercises are carried out using finite model analysis on ABAQUS to determine which shear connector can perform best. Shear connectors are used to transfer shear forces between two elements and to hold these elements together. The Bolts that will be tested for the connection include Headed Stud Shear Connectors, Lindapter Hollow Bolts and Ajax One Sided Bolts. Headed Stud Shear connectors are commonly used bolts in the retrofitting of steel and concrete materials. They consist of a head, shank and weld collar. Headed shear studs are proven to be effective with diameters of up to 25mm (Hendy 2006). They are most effective with steel in tension and concrete in compression. Blind Bolts are effective as they can be used when access is only provided from one side of an element. The Lindapter Hollow Bolt is one of two blind bolts which will be tested for strength and performance. The bolt is effective on structures such as bridges, where it is difficult to access a certain side to effectively attach the bolt. The Lindapter hollow bolt is effective as it requires

no welding and has been proven in tension and shear (Trebilcock 2004). The AJAX ONESIDE Bolt is also evaluated for performance and strength. The bolt consists of a circular head, a steeped washer, a pit stepped washer and a standard nut (Yao, Goldsworthy & Gad 2008). It is a cost effective method of retrofit as it is easy to install on site reducing requirement for labour.

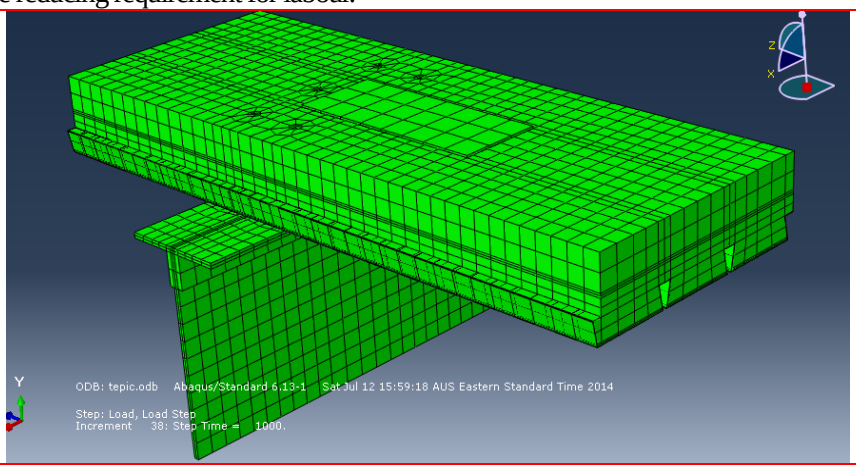

Fig. 5 Finite element modelling of composite slab

In this study, finite element models of composite slabs have been developed as shown in Fig. 5. This model has been verified by Griffin et al. (2015). Materials used in the design herein and analysed under these properties are listed below:

3.1 Concrete

Concrete has an ability to be modelled with multiple techniques, with the most common technique being plastic elastic method. Plastic elastic method shall be applied within the modelling of this project for the analysis of each bolt type in separate form. Panel analysis using the finite element method will require 50 MPa of compressive strength for the concrete as previously obtained (Griffin, 2013; Akono et al., 2018). A stress strain curve which represents non-linear behaviour of a given concrete material is used as a calculation reference prior to an ABAQUS analysis. Values which must be extracted for successful analysis include a concrete Young's Modulus with a value of 34652 MPa and a Poisson's Ratio which shall be 0.2. These have previously been calculated by Griffin (2013) in accordance with Australian Standards 3600 for concrete materials. Mirza and Uy (2011) stated the following equations regarding the calculation of stresses in a model:

$$\sigma_c = \frac{f'_c \gamma \left(\frac{\varepsilon_c}{\varepsilon'_c} \right)}{\gamma - 1 + \left(\frac{\varepsilon_c}{\varepsilon'_c} \right)^{\gamma}} \tag{1}$$

Where:

$$\gamma = \left| \frac{f'_c}{32.4} \right|^3 + 1.55 \qquad \text{and } \varepsilon'_c = 0.002$$

3.2 Steel

Extensive studies comprised by Mirza (2008) indicate different functions of steel components regarding the stress strain relationship. Within the study, reinforced steel members have had the ability to be modelled with the use of a tri-linear curve. The curve shows a primary stage of linear elastic steel, following with gradual softening and therefore yielding as a result. Due to a lack of strain softening, shear stud connectors may be determined using a bi-linear curve in regards to modelling a stress and strain relationship. The model in this project will comprise of materials used in Griffin's (2013) research with an aim to continue and further perfect the model panel track work under three different types of bolts. Material properties which remain a constant include a steel Young's Modulus of 200,000 MPa and a Poisson's Ratio which is valued at 0.3.

3.2.1 Steel girder

A steel girder acts as a main form of support in any given structure. The initial Sydney Harbour Bridge design and construction focussed on installing a mild steel beam which was considered strong in tension and shear and had an ultimate tensile strength of 480 MPa. Its manufacturing consisted of hot rolling due to its ability to normalise and align steel. All dimensions of the steel girder are shown in the ABAQUS software analysis respectively.

3.2.2 Shear connectors and bolts

Headed shear stud connector has been designed in order to secure the steel beam to the concrete member with an aim to resist shear loads which act between the slab and steel beam as shown in Fig. 6. The yield stress which was previously obtain and therefore applied in this design is 420 MPa. Diameters of the stud connectors range between 13mm and 25mm. Post welding, the stud connector is approximately 8mm shorter when it is welded into the deck. Through further research, it has been estimated that yield stress of the AJAX One sided bolt is 558 MPa, while the Lindapter blind bolt has a yield stress of 510 MPa.

(a) Three Bolts Tested in Design

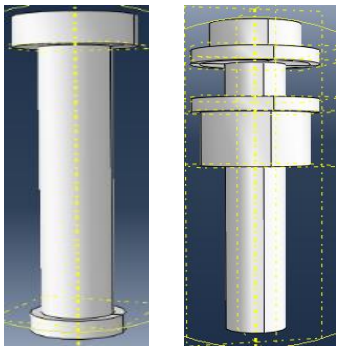

(b) ABAQUS Shear Stud & AJAX Oneside Bolts

Fig. 6 Bolt modelling

3.2.3 Bondek II

Bondek II refers to a steel sheeting design, reinforcement which is placed on the surface of concrete slabs and is regarded as highly efficient. Acting as a ceiling system, this method of retrofitting is considered extremely cost beneficial. The thickness of the bondek used in the design herein is 1mm. Strength in the bond between the bondek sheeting and the concrete enables effective composite actions for the member. The width of a single bondek sheet is 590mm which in itself contains a total of three ribs. Properties include a yield stress of 550 MPa and a total mass of 13.79 kg/m^2 per sheet as shown in the Lysaght bondek II manual. Load calculations along with the installation of Bondek II shall be completed in accordance with Australian

Standards 3600. Stress and strain behaviours of materials can be seen in Fig. 7 and its strength limits are tabulated in Table 1.

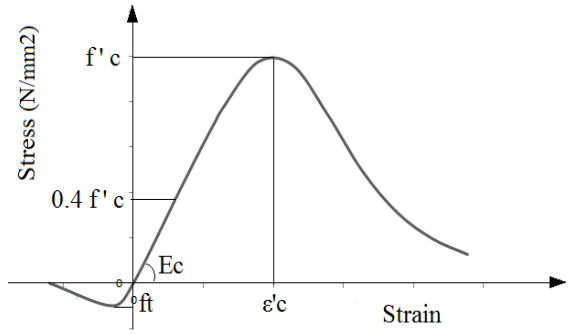

(a) Concrete

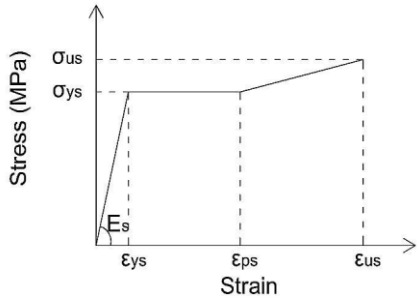

(b) Stringer and reinforced metal

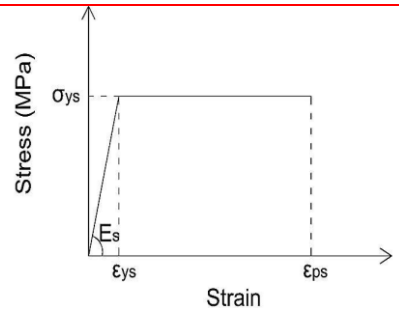

(c) Wind direction profile

Fig. 7 Material properties

Table 1 Design material properties

Element	Yeild Stress f_y (MPa)	σ_{us} (MPa)	ε_{ps}	ε_{us}
Stringer	300	1.28 σys	10 εys	30 εys
Reinforcing Steel	500	1.28 σys	9 εys	40 εys
Bondek II	550	N/A	20 εys	N/A
Shear Studs	420	N/A	25 εys	N/A
AJAX Oneside	558	N/A	25 εys	N/A
Lindapter Blind	510	N/A	25 εys	N/A

Panel designs will be modelled using three-dimensional solid elements in order to achieve analytical accuracy in the finite element method, providing they are not distorted. As outlined by Dassault (2011), nodes can be defined through five aspects of behaviour. These aspects are family, degrees of freedom, node number, formulation and finally integration. An 8-noded element by the name of (C3D8R) is most commonly used to reduce integration and improve the rate of convergence inside a structural steel beam. Furthermore, a provision of a constant volumetric strain within the element induced by (C3D8R) prevents the locking of a mesh process which would render the analysis incompressible (Mirza, 2008). As part of a breakdown, it is understood that each initial of the name may be described extensively as part of a processes where, 'C' is used to represent a continuum family, '3D' shows a total of three degrees of transitional freedom, '8' is simply the number of nodes relating to the noted degrees of freedom and finally, 'R' is most commonly known as a reduced analysis for integration. 'Hourglassing' however, is often produced creating various analytical problems where stresses and

strains result in a zero value for the eight nodes when reduced integration is taking place. The details of this disadvantage are further described in Dassault's (2011) studies.An alternate three-dimensional thirty node quadratic element called (C3D20R) was used for the analysis due to higher accuracy and more rational results that it had produced as discussed by Mirza (2008). Griffin (2013) however, controversially applied (C3D8R) element in his Bondek II analysis where aspect ratio issues have been avoided by smaller meshing. Furthermore, a doubly curved, thin shell element containing four nodes (S4R) had been used in steel sheeting analysis. According to Mirza (2008), this has been the most appropriate and suitable element type.

Contact in composite structures often refers to a connection where two primary members such as a steel beam and concrete slab elements are linked to one another and allow significant displacements. This process is called partial interaction. The interaction of sections within FEM software such as ABAQUS is essential in obtaining precision for final results of any analysis. In accordance with Griffin (2013), contact between elements within a member such as composite beams and slabs is necessary in understanding and obtaining flexural capacities. The two major aspects, which are essential in comprising and defining interactions, include a master surface and slave surface. These surfaces vary depending on material stiffness as materials, which are generally high in stiffness, are classified as a master surface. A further kinematic constraint is assigned in the input in order to ensure no penetration is enabled between the two surfaces. As discussed by Dassault (2011), a revered assigning of the surface shall not produce incorrect results and meshing analysis however it may increase the total analysis duration and prolong its results. The master surface in this project has been noted as the connector shank and head for each individual bolt type. Friction coefficient of 0.5 in a tangential direction had been assigned in the project herein regarding contact interaction of concrete and bondek II. A total of eight tie constraints have been comprised due to the necessary analysis of three different types of bolts, with two contact interactions which employ a surface to surface technique regarding concrete to bondek II and bondek II on stringer. Bondek II on stinger interaction has been noted as frictionless. Remaining tie constraints have been shown in Table 2. Tie constraints involving the three separate bolt connections and surrounding concrete have a friction coefficient of 0.25 which was adopted form the studies of Mirza (2008).

Table 2 Master and slave surface designation

Interface	Interface Type	Master Surface	Slave Surface
1) Reinforced Steel to Concrete	Embedded	Reinforced Steel	Concrete
2) Concrete to Bondek II	Surface to Surface	Bondek II	Concrete
3) Shear Stud Bolt in Concrete	Tie Constraint	Shear Stud Bolt	Concrete
4) Shear Stud Bolt Weld to Bondek II	Tie Constraint	Bondek II	Shear Stud Bolt
5) AJAX Oneside in Bondek II	Tie Constraint	Bondek II	AJAX Oneside
6) AJAX Oneside in Stringer	Tie Constraint	AJAX Oneside Bolt	Stringer
7) Lindapter Blind Bolt in Bondek II	Tie Constraint	Bondek II	Lindapter Blind Bolt
8) Lindapter Blind Bolt in Stringer	Tie Constraint	Lindapter Blind Bolt	Stringer
9) AJAX Oneside in Concrete	Tie Constraint	AJAX Oneside Bolt	Concrete
10) Lindapter Blind Bolt in Concrete	Tie Constraint	Lindapter Blind Bolt	Concrete
11) Bondek II Weld to Stringer	Tie Constraint	Bondek II	Stringer
12) Bondek II on Stringer	Surface to Surface	Bondek II	Stringer

A process has been carried out where a shear stud, blind bolt and AJAX bolt connectors have been restrained through various forms and steps involving assigned boundary conditions and slower load application, in order to obtain an initial analysis, but eventually freed of any restraint to carry out the remaining steps. The

friction coefficients proved effective in enabling result accuracy regarding the load slip response of all bolt types. Similarly, significant studies have been comprised by Nguyen and Kim (2009) involving an extensive analysis of push tests between shear stud and concrete surfaces providing positive results. Tie constraints are often used in order to simulate a mechanical link, which shall be fixed and placed between two instances. Characteristics of each bolt have been modelled through the input of a 'tie constraint' option in the ABAQUS software.

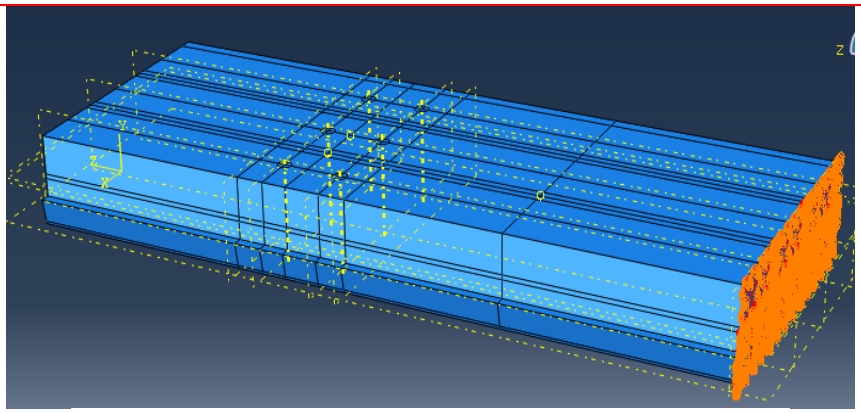

(a) Symmetrical member with boundary condition imposed in z-axis

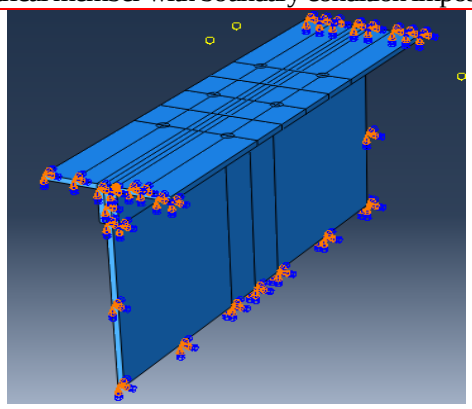

(b) Stringer in fixed boundary condition

Fig. 8 Boundary conditions

The importance of assigning boundary conditions plays a crucial role in confining numerous part instances within the software. The finite model will therefore be presented with accuracy in representing the boundary conditions imposed on a real model. The models using boundary conditions must be assigned with consideration as they would be in their real life physique in order to provide constant and accrete results of an analysis. For instance, a model may not have a designed pinned boundary condition at a given edge whilst the physical member is permanently fixed in position. This will therefore post analysis, provide incorrect results. In the ABAQUS software, various boundary conditions are possible for application on surfaces and edges, as well as nodes. ABAQUS allows models to be symmetrical in shape, as is shown in the Fig. 8a, where in this design; the boundary conditions have been imposed to the symmetrical member in the z axis. Loadings and restraints have an ability to be reduced in size for the purpose of reduction regarding the time of the total analysis. Translation and rotation is further defined in the boundary condition module with respect to the model

conditions. Shanmugam (2002) analysed a quarter model to understand and determine the results of a composite slab when symmetrical loading is applied to the member. These types of models have also been tested by various researchers including Mirza (2008) and Lam and El-Lobody (2001) in regards to shear stud connectors.

The in-service panel model has been designed symmetrically within the project and is has the ability to be designed as a half model. This half model is therefore symmetrical about the x axis as shown in Fig. 8b. It shows the surface, which is defined as symmetrical with all the nodes of concrete and bondek II materials which are present on this particular surface, have a translation restriction in the z direction. Due to the fact that that the loading onto the stringer is not the focal point of the study and analysis herein, only a reduced section has been modelled in the design. The edges of this stringer as well as the nodes have been designed to be restrained from both translation and rotation in all directions. This process is better known as an Encastre boundary condition.

As the load combination calculations were identified (Griffins et al. 2015), the worst case has been adapted and applied in the simulation. A live load of 492 kN/m has been applied as per calculations and is uniformly distributed across the centreline of the surface. The application of this load has been shown over the shaded region in Fig. 9. The load is then converted to pressure through a process of division by the rail pad width which is 200mm as designed. The resultant pressure is therefore: 492 / 200 = 2.46 MPa. A further dead load pressure as a resultant form the worst case design in load combinations has also been applied over the entire surface of the panel as shown in the figure below. This pressure is determined by (1.4 x (2400 x 9.81) x 0.18) x 10^{-6} = 0.0059 MPa.

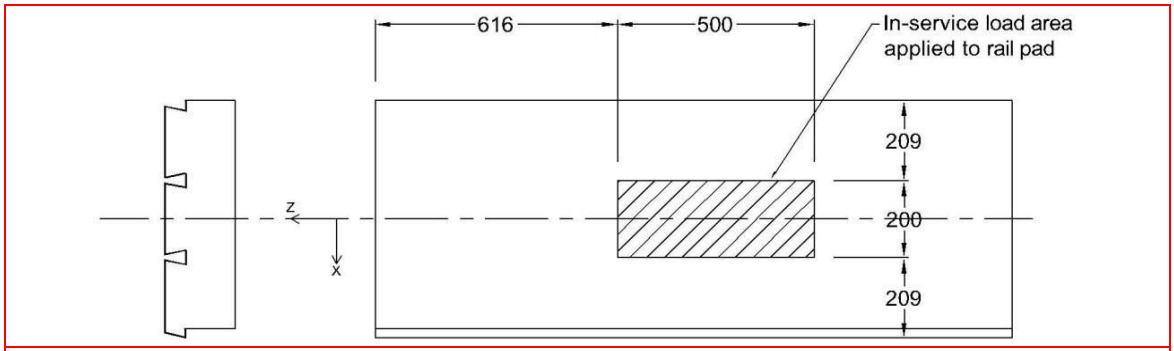

Fig. 9 In-service panel load application

4. Results and Discussion

Stress distributions are obtained through the finite element analyses. The red contour of stress highlights the locations where initial cracking in the concrete takes place.

4.1 Headed Shear Stud Connector

Fig. 10 shows the stress distribution at 5MPa for the headed shear stud. This is the initial stress in the concrete, where initial cracking takes place in the model. Cracking of the concrete around the mid-section seems to distribute evenly and propagate outwards towards the far edge as shown in Fig. 10a. Looking at the bolts on the left hand side of this model, it is apparent that the concrete clearly distributes the stress into the studs. It illustrates this through the red section in the middle of the shear studs. However the shear stud on the right hand side has no stress transferred through it yet, in this case the concrete will still carry stress. Fig. 10b shows the plan view of the model. This section clearly shows that the stress distributes at a much higher level

around only one line of the shear bolts. This causes a larger amount of initial cracking as can be seen by the increased areas highlighted in red. As for the shear bolts on the left, they seem to distribute some of the stress out of the concrete.

Fig. 10c shows the stress distribution at 50MPa which is the ultimate compressive strength of the concrete. This was applied to the design as part of the Rail Corp requirement. It reveals that the large majority of stress has now moved into the stringer. However, there is still a small section of concrete which is cracking in the middle of the slab around the bolts as can be seen in the areas colored in red, yellow and green above the stringer. This illustrates that at 50MPa, stress is still being distributed in the concrete through the headed stud shear connectors. Fig. 10d illustrates how the large majority of stress has now been transferred into the stringer section through the shear stud bolts. There is still some stress distribution in the concrete around the bolts.

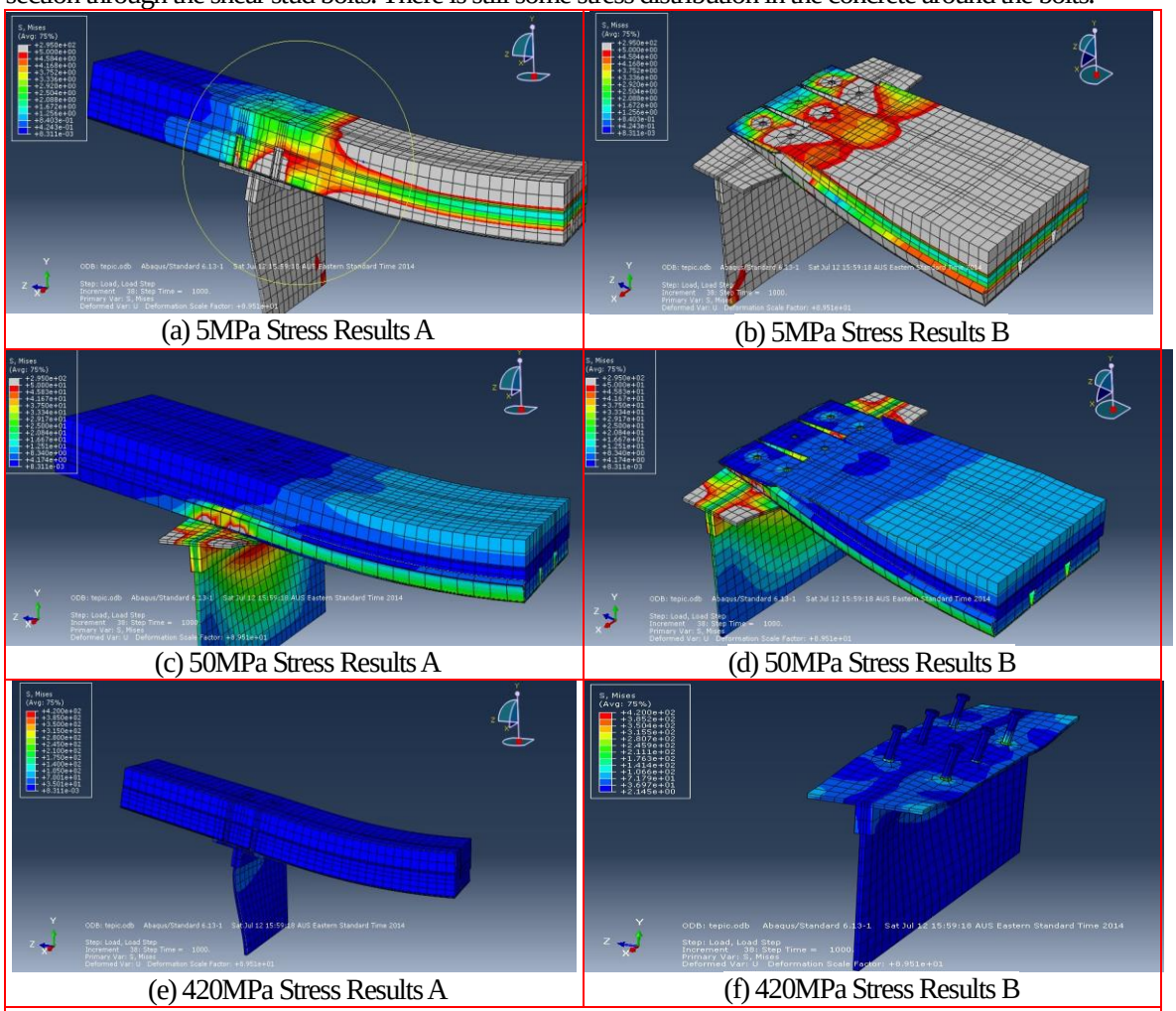

(a) 5MPa Stress Results A (b) 5MPa Stress Results B

(c) 50MPa Stress Results A (d) 50MPa Stress Results B

(e) 420MPa Stress Results A (f) 420MPa Stress Results B

Fig. 10 Finite element analyses of headed shear stud connector

Fig. 10e shows the stress distribution at 420MPa which is the ultimate strength of the stringer. In this model, the concrete has cracked throughout the entire slab. Fig. 10f shows the model without the concrete slab. The figure above illustrates the stress distribution in the stringer and in the shear stud connectors. At 420MPa the shear connectors continue to distribute the stress to the stringer through headed stud shear connectors. The

stringer is yet to reach its ultimate yield strength, therefore according to the analysis the model is still within the design capacity.

4.2 Ajax Blind Bolt

Fig. 11a shows the stress distribution at 5MPa. This is the initial stress in the concrete where initial cracking takes place in the model with the AJAX Blind Bolts. The cracking in this model seems to be more evenly distributed around all the bolts when compared to the headed stud shear connectors. It is clear that in this case the stress is being distributed from the concrete into both rows of bolts evenly. This is a great advantage as less stress in distributed in the concrete section as it moves through the bolts and into the stringer. This will results in less cracking in the concrete. Fig. 11b shows the plan view of the model with the AJAX blind bolts. This section shows the stress being distributed more evenly into the all the AJAX bolts when compared to the headed shear studs. There is clearly not as much initial cracking in this model either. It exhibits a much better stress distribution from the concrete to the AJAX bolts.

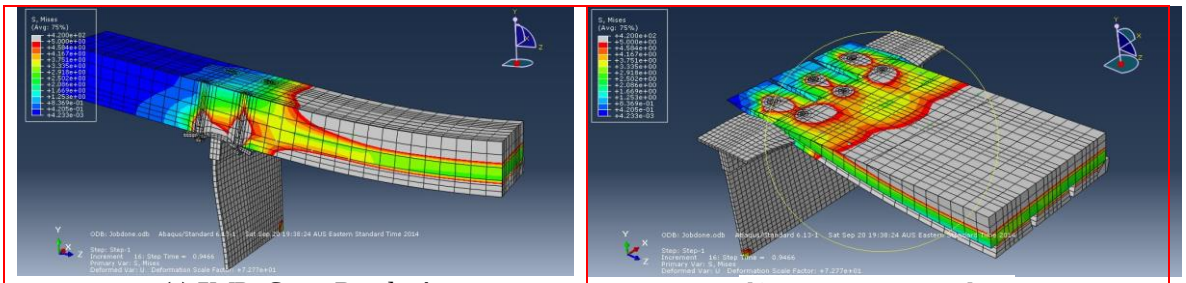

(a) 5MPa Stress Results A

(b) 5MPa Stress Results B

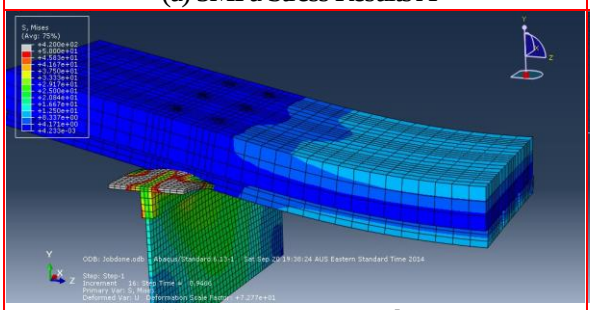

(c) 50MPa Stress Results A

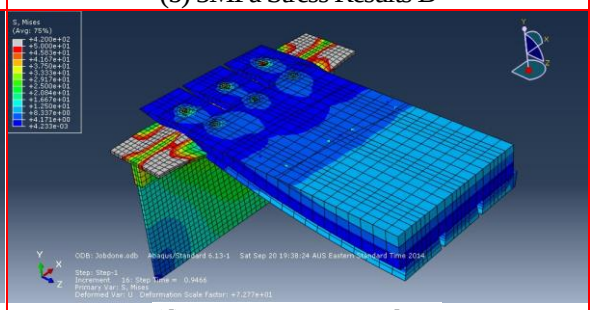

(d) 50MPa Stress Results B

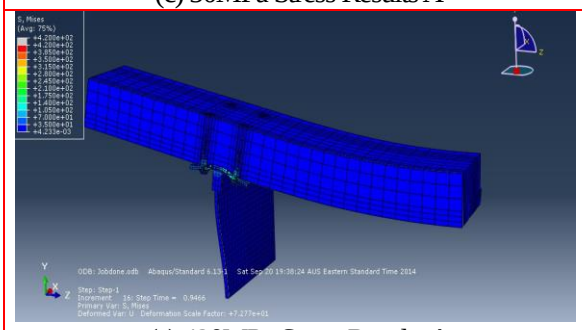

(e) 420MPa Stress Results A

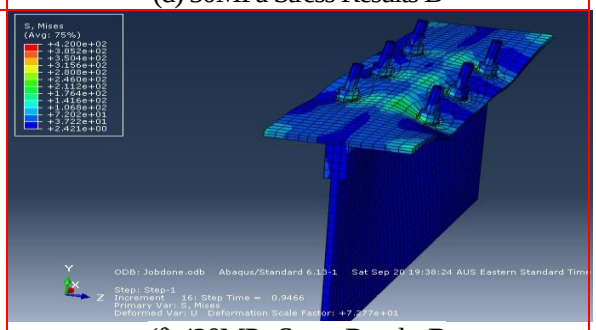

(f) 420MPa Stress Results B

Fig. 11 Finite element analyses of AJAX one-side blind bolt

Fig. 11c highlights the stress distribution at 50MPa, which is the ultimate strength of the concrete that was used in this model. It demonstrates that the stress has now distributed into the stringer. It is clear that there is

less stress in the concrete slab, which means there is a smaller amount of cracking when compared to the slab with shear connectors. Fig. 11d illustrates how the stress in the model has distributed from the concrete into the stringer through the AJAX bolts. There is minimal stress surrounding the bolts therefore less cracking will occur in the concrete section. When comparing this to the headed stud shear connectors, we can see that there is more stress in the concrete around the headed studs when compared to this model.

Fig. 11e shows the stress distribution at 420MPa, which is the ultimate strength of the stringer. It can see that there is still a significant amount of stress being distributed into the stringer. This shows that the AJAX bolt, even at 420MPa has the potential do distribute the stress from the concrete panel into the stringer. Fig. 11f demonstrates how the large majority of the stress has been distributed into the stringer. The figure shows that the AJAX bolts have distributed this stress into the stringer more evenly that in the model with the headed stud shear connectors. All the AJAX bolts are distributing the stress when compared to only the far end studs in the shear connectors, which could be seen in figure F in the shear stud section.

4.3 Lindapter Hollow Bolt

Fig. 12a shows the stress distribution at 5MPa. This is the initial stress in the concrete where initial cracking takes place in the model with the Lindapter bolts. There is more initial cracking on the right hand side of the model due it the load being applied to that section of the slab. However, the stress in the concrete seems to distribute in the concrete around all bolts. Most of the initial cracking takes place around the bolts on the left side of the slab. The cracking seems to also begin on the bolts on the right however the cracking propagates towards the middle and far edge of the concrete slab.

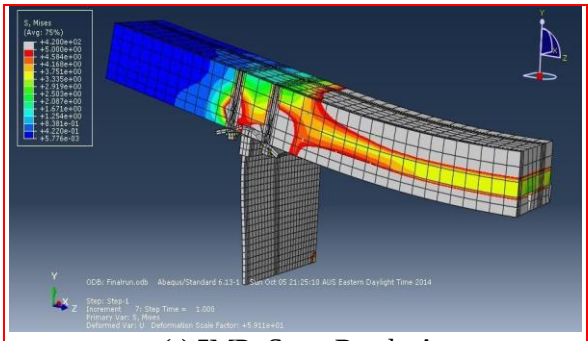

(a) 5MPa Stress Results A

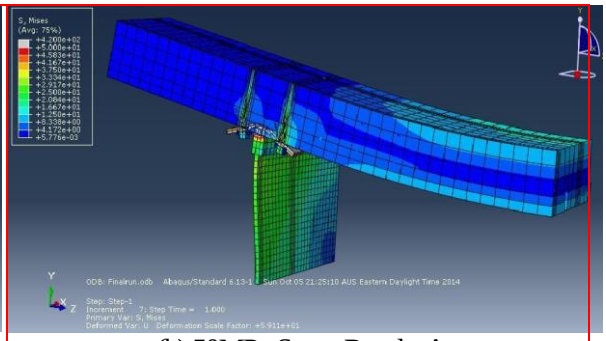

(b) 50MPa Stress Results A

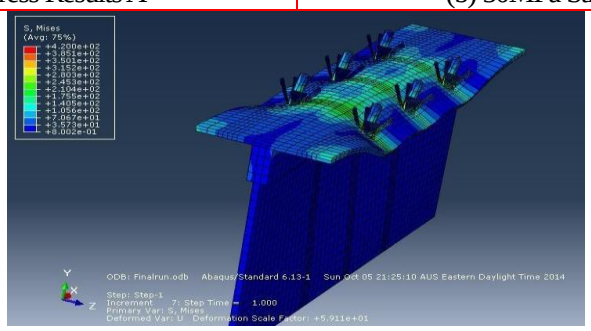

(c) 420MPa Stress Results A

Fig. 12 Finite element analyses of Lindapter hollow bolt

Fig. 12b shows the stress distribution at 50MPa, which is the ultimate compressive strength of the concrete that was applied to the design as part of the Rail Corp requirement. It is noted that the large majority of stress

has now moved into the stringer. It can be seen that there is minimal stress still in the concrete slab or even in the concrete around the bolts. This model distributes the stress out of the concrete most effectively at 50MPa when compared to the other 2 models. The Lindapter bolts are successful at transferring the stress applied to the model through the bolts themselves and into the stringer. We can gather from the numerical results that the Lindapter bolts are still transferring stress from the concrete into the Stringer when analyzed at 50MPa.

Fig. 12c shows the stress distribution at 420MPa, which is the ultimate strength of the stringer. It can be seen that there is still a significant amount of stress being distributed into the stringer. This shows that the Lindapter bolt, even at 420MPa has the potential do distribute the stress from the concrete panel into the stringer. When compared to the other models at 420MPa, it can clearly be said that the Lindapter bolts distribute the stress in the most effective way. As can be seen in the above Figure, the stress is distributed fairly evenly throughout the entire stringer. As the stringer also bends, it shows that all parts of the stringer are playing a part in distributing the stress. These Lindapter bolts help to contain and distribute the stresses effectively out of the concrete, through the bolts and into the stringer. This will ultimately result in the least cracking out of all 3 models, which have been analysed.

5. Conclusions

The primary objectives presented within this study include determining the effects that shear studs, AJAX One-sided and Lindapter Blind bolts have on a precast steel-concrete composite panel. The bolts are theoretically retrofitted to the continuous panel, which has been designed for the railway corridor of the Sydney Harbour Bridge. Finite element analysis was used to model and analyse these bolts. The main focus of this analysis was to determine the stress distribution and failure mode in shear and flexural capacities. A benefit of performing a finite element analysis is that it is visually presented at which points all combined forces are being applied. As a result of this, the model is capable of determining correctly when the initially cracking occurs and at which capacity the structure failed.

It is evident through the stress distributions that the connectors are able to distribute stress from the concrete slab into the stringer. The headed stud shear connectors have been tested and used around the world and the results in this research show that is an option, which RailCorp could adapt on retrofitting the Sydney Harbour Bridge. The AJAX ONESIDE bolt is an Australian invention, designed to meet AS4100, which consists of a bolt with a circular head, a stepped washer, a split stepped washer and a standard nut. The AJAX bolt has an effective installation process as it requires access to only one side of the structure. The AJAX bolts are also effective in transferring the stress from the concrete slab into the stringer, reducing the amount of initial cracking in the concrete section.

The Lindapter Hollow-Bolt is a blind bolt which is a cost effective connection for structural hollow sections. It has been tested both under tensile and shear conditions. The Lindapter bolt is also installed from only one side of a structure however it is installed from the bottom for retrofitting purposes. The stress distribution shows that the bolts also effectively distribute stress uniformly from the concrete slab into the stringer. This makes it another suitable option for retrofitting. Through the finite element analysis, it is evident that each bolt distributes stress differently. This is seen through noticeable differences between all the stress distribution which have been analyzed Section 4. All three connectors are able to effectively distribute the stress from the concrete slab through the bolts and into the stringer.

When compared to the AJAX bolts and Lindapter bolts, the shear stud connectors did not distribute stress as evenly through to the stringer. It can be observed that certain headed stud shear bolts distributed a lot more stress than the others from the concrete to the stringer. The AJAX bolt proved to have a more uniform

distribution through all the bolts. The Lindapter bolts, however, proved to have the most uniform distribution of stress into the stringer out of all the bolts tested. This is clearly evident when the stress distribution is modeled at 420MPa. Analyzing the model at 420MPa gives the clearest representation of how the stress is distributed into the stringer. Through finite element analysis it was determined that the Lindapter bolt was the most effective at uniformly distributing the stress applied on the precast concrete slab into the stringer. The concrete slab with the Lindapter bolts has to deal with the least level of stress when compared to models with the AJAX bolts and headed stud shear connectors.

Although the Lindapter bolt shows the most effective form of stress distribution, its installation process is rather difficult. The AJAX blind bolt is the most useful type of bolt as it can be conveniently installed form the surface as opposed to Lindapter blind bolt, which may only be installed from below the bridge. It is also recommended that further studies be comprised within this study to enable a further vital opinion on the subject in terms of constructability, maintainability and practicality. Lindapter blind bolt is however recommended from an engineering perspective as a means of retrofitting based on the analysis herein.

Acknowledgments

The authors are grateful to the Institute of Infrastructure Engineering, University of Western Sydney Australia for the financial support throughout this study. The second author wishes to thank Japan Society for the Promotion of Science for Invitation Research Fellowship (Long-term), Grant No. L15701, at Railway Technical Research Institute and the University of Tokyo, Japan. Special thanks are also given to the European Commission for financial sponsorship via the H2020-MSCA-RISE Project No. 691135 RISEN: “Rail Infrastructure Systems Engineering Network”, which enables a global research network to tackle the grand challenge of railway infrastructure resilience in the face of physical natural and unnatural threats, as well as advanced sensing under extreme conditions (www.risen2rail.eu).

References

Akono, A-T., Chen, J., Kaewunruen, S. (2018), “Friction and fracture characteristics of engineered crumb-rubber concrete at microscopic lengthscale”, *Construction and Building Materials*, 175, 735-745.

Crawford, RH 2009, 'Greenhouse gas emissions embodied in reinforced concrete and timber railway sleepers', *Environmental science & technology*, 43(10): 3885-90.

Dassault, S 2011, 'Abaqus 6.11 Online Documentation', vol. 2011_04_07-11.54.48 40404, (accessed on 25/09/14).

Dj, O & L, F 1985, 'THE FATIGUE STRENGTH OF STUD SHEAR CONNECTIONS IN COMPOSITE BEAMS', *ICE Proceedings*, vol. 79, no. 2, pp. 349-64

Fanaie, N., Ghalamzan Esfahani, F., and Soroushnia, S., (2015), “Analytical study of composite beams with different arrangements of channel shear connectors”, *Steel and Composite Structures*, 19(2): 485-501

Griffin, D, (2013), “Design of precast composite steel-concrete panels for track support: For use on the Sydney Harbour Bridge,” *Thesis*, University of Western Sydney, 2013

Griffin, D.W.P.., Mirza, O., Kwok, K., and Kaewunruen, S., (2014), "Composites for railway construction and maintenance: A review", *The IES Journal Part A: Civil & Structural Engineering*, 7 (4), 243-262.

Griffin, D.W.P.., Mirza, O., Kwok, K., and Kaewunruen, S., (2015), "Finite element modelling of modular precast composites for railway track support structure: A battle to save Sydney Harbour Bridge", *Australian Journal of Structural Engineering*, 16 (2), 150-168.

Hendy, CR (2006), "Designers' guide to EN 1994-2 : Eurocode 4, design of steel and composite structures. Part 2, General rules and rules for bridges," *Eurocode 4, design of steel and composite structures*, London: Thomas Telford, London.

International Symposium on Tubular, S (2009), *Tubular structures XII : proceedings of the 12th International Symposium on Tubular Structures, Shanghai, China, 8-10 October 2008*, Boca Raton.

Kaewunruen, S. (2014), "Impact damage mechanism and mitigation by ballast bonding at railway bridge ends", *International Journal of Railway Technology*, 3(4), 1-22.

Kaewunruen, S., Kimani, S.K. (2017), "Damped frequencies of precast modular steel-concrete composite railway track slabs", *Steel and Comp. Struct.*, 25(4): 427-442.

Kaewunruen, S., Remennikov, A.M. and Murray, M.H., (2014), "Introducing limit states design concept to concrete sleepers: an Australian experience." *Frontiers in Materials*, 1(8):1-3.

Kaewunruen, S., Wang, Y., Ngamkhanong, C. (2018), "Derailment-resistant performance of modular composite rail track slabs", *Engineering Structures*, 160: 1-11.

Kimani, S.K., Kaewunruen, S. (2017), "Free vibrations of precast modular steel-concrete composite railway track slabs", *Steel and Comp. Struct.*, 24(1): 113-128.

Kirkland, B. and Uy, B., (2015), "Behaviour and design of composite beams subjected to flexure and axial load", *Steel and Comp. Struct.*, 19(3): 615-633.

Lam, D & El-Lobody, E (2001), 'Finite Element Modelling of Headed Stud Shear Connectors in Steel-Concrete Composite Beam', in A Zingoni (ed.), *Structural Engineering, Mechanics and Computation*, Elsevier Science, Oxford, pp. 401-408.

Lezgy-Nazargah, M. and Kafi, L., (2015), "Analysis of composite steel-concrete beams using a refined high-order beam theory", *Steel and Comp. Struct.*, 18(6): 1369-1389.

Li, J., Huo, Q., Li, X., Kong, X. and Wu, W. (2014), "Dynamic stiffness analysis of steel-concrete composite beams", *Steel and Comp. Struct.*, 16(6): 577-593.

Li, F., Wu, P., and Liu, D., (2012), "Experimental study on the cable rigidness and static behaviours of AERORail structure", *Steel and Comp. Struct.*, 12(5): 427-444.

Manalo, A, Aravinthan, T, Karunasena, W & Ticoalu, A (2010), 'A review of alternative materials for replacing existing timber sleepers', *Composite Structures*, vol. 92, no. 3, pp. 603-611.

Micenko, P. (2014), "Major periodic maintenance: determining asset life, criticality and priority", *Proceedings of 2014 RSSB National Turnout Workshop*, Brisbane, Australia, May.

Mirza, O. (2008), "*Behaviour and design of headed stud shear connectors in composite steel-concrete beams"*, *PhD Thesis*, The University of Western Sydney, Kingswood, Australia.

Mirza, O. and Uy, B. (2011), 'Behaviour of composite beam-column flush end-plate connections subjected to low-probability, high-consequence loading', *Engineering Structures*, vol 33, no 2 , pp 647 – 662.

Mirza, O, Uy, B, and Patel, N (2010), 'Behaviour and strength of shear connectors utilising blind bolting', paper presented to 4th International Conference on Steel and Composite Structures, Sydney, Australia.

Mirza, O., Kaewunruen, S., Kwok, K, Giffins, D. (2016) Design and modelling of pre-cast steel-concrete composites for resilient railway track slabs, *Steel and Comp. Struct.*, 22(3): 537-565.

Nguyen, HT & Kim, SE (2009), 'Finite element modelling of push-out tests for large stud shear connectors', *Journal of Constructional Steel Research*, vol. 65, no. 10–11, pp. 1909-20.

Pecce, M., Rossi, F., Antonio Bibbo, F. and Ceroni, F., (2012), "Experimental behaviour of composite beams subjected to a hogging moment", *Steel and Composite Structures*, 12(5): 395-412.

Remennikov, A.M., Kaewunruen, S. (2008), 'A review of loading conditions for railway track structures due to train and track vertical interaction,' *Structural Control and Health Monitoring*. **15**(2), 207-234.

Remennikov, A.M., Murray, M.H., and Kaewunruen, S. (2012), "Reliability based conversion of a structural design code for prestressed concrete sleepers," *Proceedings of the Institution of Mechanical Engineers: Part F Journal of Rail and Rapid Transit*, 226(2): 155-173.

Remennikov, A.M., Kaewunruen, S. (2014), "Experimental load rating of aged railway concrete sleepers," *Engineering Structures*, 76(10): 147-162.

Shanmugam, NE, Kumar, G & Thevendran, V. (2002), 'Finite element modelling of double skin composite slabs', *Finite Elements in Analysis and Design*, vol. 38, no. 7, pp. 579-99.

Shanmuganathan, S, Speers, R, Ruodong, P & Sriskanthan, S (2011), 'Sydney Harbour Bridge: replacement rail track support', in *Austroads Bridge Conference, 8th, 2011, Sydney, New South Wales, Australia*.

Trebilcock, P. (2004), *Architectural design in steel*, New York, N. Y. : Spon Press, New York, N. Y

Vayas, I . (2013), *Design of Steel-Concrete Composite Bridges to Eurocodes*, Hoboken : CRC Press, Hoboken

Yao, H, Goldsworthy, H & Gad, E 2008, 'Experimental and numerical investigation of the tensile behaviour of blind-bolted T-stub connections to concrete-filled circular columns.(Technical report)', *Journal of Structural Engineering*, vol. 134, no. 2, p. 198.