Investigating the efficiency of air-source heat pumps in the secondary school physics laboratory

Cottle, Daniel; Campbell, Robert

DOI:
10.1088/1361-6552/ad0d0c

Physics Education

PAPER • OPEN ACCESS

Investigating the efficiency of air-source heat pumps in the secondary school physics laboratory

To cite this article: Daniel Cottle and Robert Campbell 2024 *Phys. Educ.* **59** 015023

OPEN ACCESS PAPER

Phys. Educ. **59** (2024) 015023 (9pp) iopscience.org/ped

Investigating the efficiency of air-source heat pumps in the secondary school physics laboratory

Daniel Cottle[1,*] **and Robert Campbell**[2]

[1] School of Physics and Astronomy and School of Education, University of Birmingham, Birmingham, United Kingdom
[2] University of Birmingham School, Selly Oak, Birmingham, United Kingdom

E-mail: d.cottle@bham.ac.uk

Abstract
This paper presents an experimental method for investigating the coefficient of performance of air-source heat pumps for secondary age children and links this to ideas about energy efficiency. It was developed and trialled in a secondary school in the West Midlands of England in response to literature that reveals climate anxiety to be increasing amongst young people around the world and their resulting desire to take action. Links are made to the topic of energy efficiency in the current physics school curriculum in England which is used, where possible, to explain the results of the investigation with suggestions for where extensions might be made in future to facilitate a more complete understanding by pupils. Links to wider societal change in the decarbonisation of home heating in the UK as part of the national response to climate change are explored and an argument is made for the viability and necessity of including the technology of air-source heats pumps in the physics curriculum for all children.

Keywords: air source heat pump, energy efficiency, thermodynamics, climate change

* Author to whom any correspondence should be addressed.

1. Introduction

Recent large surveys of young people across the world show that climate change is a significant concern [1] that is motivating a large number to activism [2]. Anxiety and distress in young people are increasingly being linked to fears about the future and the consequences of the perceived lack of urgent response by authorities to climate change [3]. Home heating in the UK is a significant contributor to carbon emissions, in 2019 being 17% of the total which is equivalent to the contribution of all petrol and diesel cars [4]. The UK government has in fact committed to significant actions to address climate change, outlined in the strategy to reach net zero [5]. Key aims contained in this are related to the decarbonisation of home heating with commitments to 'phase out the installation of new and replacement natural gas boilers by 2035' and make 'heats pumps as cheap to buy and run as a gas boiler…to support 600 000 installations per year by 2028'. We argue that if these aims are to be met, then information and education about these changes to home heating as a way of reducing carbon emissions need to be communicated to young people in ways that enable them to understand how science and technology are contributing directly to alleviating their anxieties about climate change. We believe that young people will need to actively participate in the proposed transition of home heating from mainly gas boilers and electric immersion heaters to air source heat pumps both as consumers and by pursuing careers in a burgeoning heat pump manufacturing, installation and maintenance sector [6]. From a teaching perspective, recent surveys have shown that science teachers' support pupils desire to take action, but that their own comfort in delivering education related to climate change is related to the availability of suitable teaching resources [7]. This paper will therefore consider the efficiency of air source heat pumps from the perspective of describing and justifying a classroom activity that demonstrates to pupils how heat pumps are related to their concerns about climate change and provides sufficient support to interested teachers to be able to carry out and adapt the activity in their own secondary physics classroom. We are also aware of the related educational issue of the scientific principles of operation of heat pumps and how this relates to physics curriculum and pedagogy. We recognise this knowledge to be important but it is not considered here and is the subject of future investigation.

2. Climate change and links to heat pumps in the current school curriculum

The school physics curriculum in England as prescribed by the national curriculum programmes of study (last revised in 2015) [8] has as one of its aims the need to ensure pupils 'are equipped with the scientific knowledge required to understand the uses and implications of science, today and for the future.' General learning relating to climate change in the secondary key stage 3 age range include references to 'the production of carbon dioxide by human activity and the impact on climate' and 'fuels and energy resources'. At key stage 4 the requirements are more detailed and relate to the mitigation of increased levels of carbon dioxide on the environment, anthropogenic causes of climate change and learning about renewable and non-renewable energy sources. Using the examination board AQA GCSE Physics specification as a typical example [9], physics students in the 14–16 age range also routinely learn how to calculate stored energy in a variety of systems. They calculate power, and energy efficiency and make comparisons between different domestic appliances e.g. filament light bulbs and LED lightbulbs. A typical classroom physics activity for 14–16 year old pupils to draw together some of these themes might be to measure the efficiency of a resistive heater which is analogous to an immersion heater for hot water in a home. Figure 1 shows a representative experimental setup. Pupils would measure energy input, E_i (with a joulemeter) by electrically heating a known mass of water, m over a period of time, t. Using the thermometer the corresponding temperature rise, ΔT in the water would be measured allowing an efficiency calculation using the energy input to the water and useful thermal energy transferred in equation (1) where c, is the specific heat capacity of water.

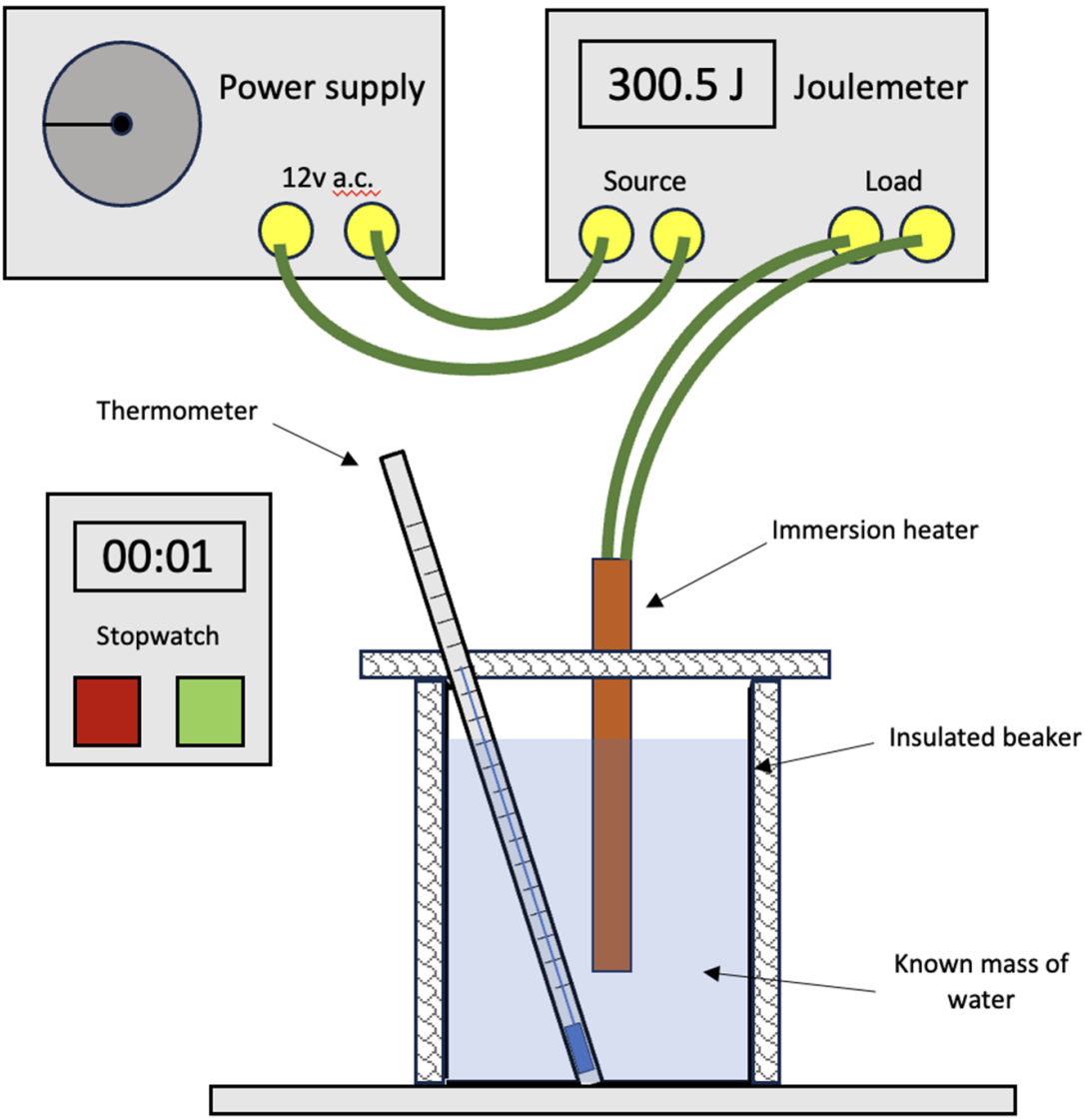

Figure 1. Classroom experiment to calculate the efficiency of a resistive heater.

$$\text{Efficiency} = \frac{\text{Useful energy output}}{\text{Energy input}} = \frac{mc\Delta T}{E_i}. \tag{1}$$

Typical classroom results obtained by pupils doing this experiment (assuming suitable insulation of the beaker) give a value of efficiency of around 0.6. This might lead to a classroom discussion that explores the concept of efficiency relating to the principle of conservation of energy. A teacher may explain that it is impossible to get more energy out than you put in and therefore all efficiency values should be less than 1. In this case the energy supplied by heating directly increased the thermal store of energy in the water and this explanation makes intuitive sense. We will go on to describe an air source heat pump being used to heat water using a similar method and in this case, we suggest that the common sense explanation of efficiency for pupils may be challenged because a simple efficiency calculation like that described above would result in a value over 1. From a pupil

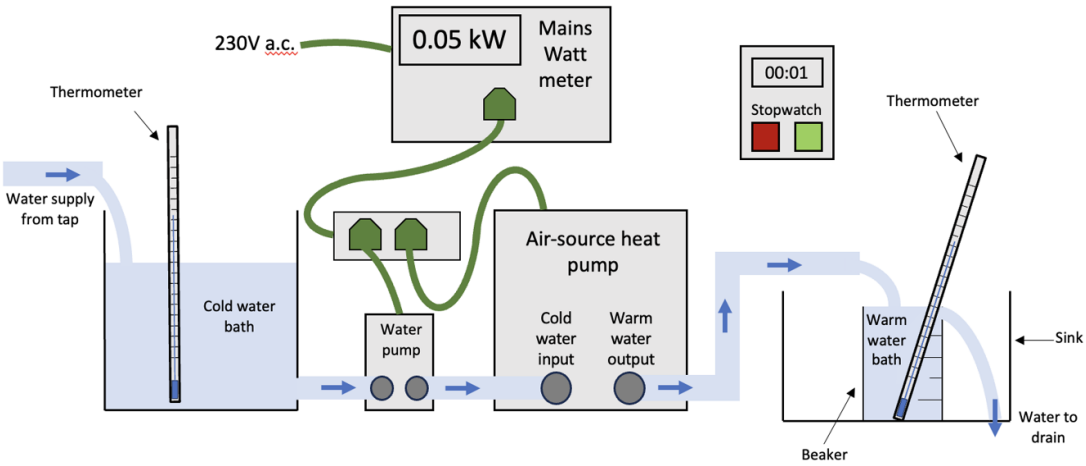

Figure 2. Diagram to show the classroom set up of an air source heat pump.

perspective this might seem to defy conservation of energy but is due to the energy input being measured as only the electrical energy to run the heat pump and not counting the thermal energy store in the air used as the source for the heat pump. We address this possible misunderstanding by introducing the useful concept of coefficient of performance (COP) which can have values greater than 1 [10]. We go on to explain why the explicit teaching of air-source heat pumps in relation to energy efficiency is important to secondary pupils' understanding of how learning physics is linked to taking action on climate change and can be related to the decarbonisation of home heating.

3. Heat pump for classroom use

An air source heat pump is a device that uses a thermodynamic refrigeration cycle to transfer stored thermal energy in the moving molecules of air outside a house to an interior thermal store in hot water to be used for home heating. Energy is supplied electrically in this process to operate pumps for refrigerant and water as well as other necessary fans and electronics [11]. Due to the use of refrigerants which may be toxic, flammable or harmful to the atmosphere, heat pumps are sold for various purposes as sealed units. These range in size from large units capable of heating a home to smaller units designed for purposes such as heating the water in swimming pools. It is one of these type that we suggest for classroom use and an example can be purchased online for less than £400 [12] at time of writing. The swimming pool heater has the following attributes which make it suitable: It runs from a normal mains electricity supply. It has easy fixings for pipes of water to be attached. It is relatively compact and low cost. Plastic pipes and fittings suitable for the low-pressure water flow through the heat pump were also usefully supplied. Disadvantages of the unit we used were that it did not come with a built-in water pump which was obtained separately [13] and controlled the flow of water through the heat pump to be heated. The heat pump described also imposes a 5 min warm-up period when switching on before it can be used and the 'sealed unit' design obscures the principles of operation of the unit itself.

4. Description of the air-source heat pump experiment

The energy per second, P_E supplied electrically to the air-source heat pump and water pump is measured using a mains Wattmeter as shown in figure 2. The mass of water, m per second, t through the heat pump is measured using a beaker and stopwatch. This is done as a flow rate where 1 cm^3 of water is assumed to have a mass of 0.001 kg and the markings on the beaker used to measure how many seconds it takes to reach 0.25 kg. For the example results shown in table 1 the flow rate is measured to be 0.03 kg s^{-1}. With the flow rate

Figure 3. Photograph of the air source heat pump experimental setup.

Figure 4. Hosepipe fitting used to connect pipe to the cold water bath.

known and kept constant by using an arrangement of a tap flowing into a cold-water bath feed supplying the water pump, the thermal energy supplied to the water per second, P_T can be measured using the temperature difference, ΔT of water between the cold water and warm water baths as seen in equation (2).

$$P_T = \frac{mc\Delta T}{t}. \tag{2}$$

A schematic diagram showing whole experimental setup is shown in figure 2 and a photograph in a classroom laboratory in figure 3. Plastic hose was used to connect the pump and heat pump with jubilee clips providing seals. A plastic storage container was used as a cold-water bath to stabilise the input water temperature and flow and the piping attached by drilling a hole and attaching a hosepipe fitting with a rubber washer as seen in figure 4. In order to achieve a stable flow, the water pump was placed vertically below the cold-water bath (on the floor). With the system running the water level in the cold-water bath remained approximately constant as the flow rate of the tap was adjusted to that of the water-pump/heat pump system. Digital temperature probes were used to monitor the temperatures of water in the cold and hot water baths along with the input power P_E as shown in figure 5. The ambient air temperature in the lab on the day these data were obtained was 24 °C and the heat pump was run for approximately 10 min prior to the start of data collection to enable its operation to stabilise. An

Figure 5. Digital thermometers and mains power meter used to obtain measurements.

example of measurements using this apparatus are shown in table 1. P_E was measured every 30 s for 20 min with calculations for P_T derived from temperature measurements.

Using equation (1), an efficiency value for the heat pump was then calculated using equation (3).

$$\text{Efficiency} = \frac{P_T}{P_E}. \tag{3}$$

From the data, it can be seen that P_T is always larger than P_E in this experiment. This means that the amount of thermal energy supplied to the water by the heat pump is larger than the amount of electrical energy required to run the system. Efficiency could then be conceived to be

Table 1. Example of data obtrained from the heat pump experiment.

Time (s)	Cold water bath temp (°C)	Warm water bath temp (°C)	Temp increase (°C)	P_E (kW)	P_T (kW)	COP
0	18.5	34.0	15.5	0.805	1.91	2.37
30	18.5	34.0	15.5	0.815	1.91	2.34
60	18.5	33.9	15.4	0.815	1.89	2.32
90	18.5	33.9	15.4	0.815	1.89	2.32
120	18.5	33.9	15.4	0.815	1.89	2.32
150	18.5	33.9	15.4	0.815	1.89	2.32
180	18.5	33.9	15.4	0.810	1.89	2.34
210	18.5	34.0	15.5	0.815	1.91	2.34
240	18.5	34.0	15.5	0.820	1.91	2.32
270	18.5	34.0	15.5	0.810	1.91	2.35
300	18.5	34.0	15.5	0.815	1.91	2.34
330	18.5	34.0	15.5	0.820	1.91	2.32
360	18.5	34.0	15.5	0.815	1.91	2.34
390	18.5	34.0	15.5	0.805	1.91	2.37
420	18.5	34.0	15.5	0.810	1.91	2.35
450	18.5	34.1	15.6	0.810	1.92	2.37
480	18.5	34.1	15.6	0.820	1.92	2.34
510	18.5	34.2	15.7	0.820	1.93	2.35
540	18.5	34.2	15.7	0.810	1.93	2.38
570	18.5	34.3	15.8	0.810	1.94	2.40
600	18.5	34.2	15.7	0.810	1.93	2.38
630	18.5	34.1	15.6	0.810	1.92	2.37
660	18.5	34.1	15.6	0.800	1.92	2.40
690	18.5	34.0	15.5	0.810	1.91	2.35
720	18.5	34.0	15.5	0.815	1.91	2.34
750	18.5	33.9	15.4	0.815	1.89	2.32
780	18.5	33.9	15.4	0.810	1.89	2.34
810	18.5	34.0	15.5	0.810	1.91	2.35
840	18.5	33.9	15.4	0.810	1.89	2.34
870	18.5	33.8	15.3	0.810	1.88	2.32
900	18.5	33.7	15.2	0.800	1.87	2.34
930	18.5	33.6	15.1	0.800	1.86	2.32
960	18.5	33.5	15.0	0.805	1.84	2.29
990	18.5	33.5	15.0	0.800	1.84	2.31
1020	18.5	33.5	15.0	0.800	1.84	2.31
1050	18.5	33.5	15.0	0.800	1.84	2.31
1080	18.5	33.5	15.0	0.795	1.84	2.32
1110	18.5	33.6	15.1	0.785	1.86	2.36
1140	18.5	33.5	15.0	0.805	1.84	2.29
1170	18.5	33.5	15.0	0.790	1.84	2.33
1200	18.5	33.5	15.0	0.810	1.84	2.28

(for example) for the first result, 2.37. The physical meaning of this being that for every 1 J of energy supplied electrically to the heat pump, the thermal energy of the water is increased by 2.37 J. Of course, the 'extra' energy is that which is stored thermally in the surrounding air, but this is not measured directly in the experiment. Efficiency in heat pump systems like this is therefore normally treated as a 'Coefficient of Performance' (COP) to avoid confusion. The COP is the ratio of useful thermal energy provided, Q to energy supplied to run the heat pump, W (equation (4)),

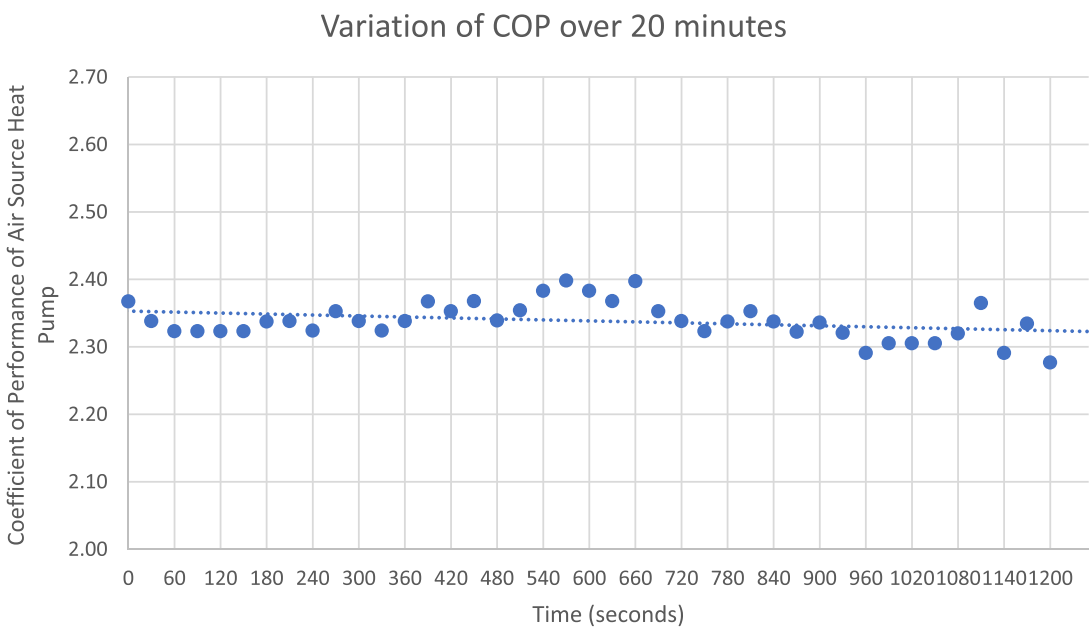

Figure 6. Graph showing the trend in coefficient of performance of the classroom air source heat pump.

where the value of COP is then usually greater than 1, and this is what is labelled in the column in table 1. Equation (4) is derived from the second law of thermodynamics for the situation in which a device uses work (in this case electrical) to transfer energy from a low temperature (the air) to high temperature (the heated water) reservoir [14]. In this experiment, the value for COP over time remained relatively stable at an average of 2.34 with standard deviation of 0.03 as can be seen by the graph in figure 6. This compares favourably to the stated COP of the commercial heat pump used which was between 2.0 and 3.5.

$$\mathrm{COP} = \frac{Q}{W}. \tag{4}$$

5. Discussion

The data it is possible to obtain from this apparatus easily allows values of COP to be obtained from the air source heat pump which can be compared to other forms of heating water in the physics curriculum such as the immersion heater described above. The data also allow discussion of how the COP calculation differs from a simpler energy efficiency calculation, in the assumption of what energy can be measured as the input to the air-source heat pump system that enables the values of COP to be greater than 1 and why this is a useful measure of comparison for devices of this type. The values are representative and typical and open the door to further investigations relating to the application of decarbonised home heating. For example, the experiment could be run at different ambient air temperatures, because one common concern raised about the use of air-source heat pumps for home heating in the UK is that the most need for the heat is when the air is at its coolest in winter. Pupils could therefore investigate the COP at different times in the year and relate this to data from recent studies attempting similar experiments in homes [15]. The equipment is even compact enough to consider running outside. The temperature increase of the water passing through the air source heat pump can also be intuitively experienced by dipping fingers in the hot and cold water baths. The temperature increase is significant but not dangerous, being an average of 15.4 °C in the example data. The investigation shows that this heat rise is not easily altered however, and therefore the impact on home thermal design could be explored with discussion of the need for higher volume radiators and improvements to insulation in most homes required for optimum impact of

installing a heat pump. Exploring ways of making the internal functioning of the heat pump more explicit using heat pumps designed for educational use would also be useful for pupils to be able to understand how the water is heated through a thermodynamic cycle, why there is a need for a refrigerant (a point which may lead to further discussions around the carbon footprint of manufacture or release into the atmosphere) and how this is different to the resistive heating by electric immersion heater. Highlighting the use of COP rather than efficiency is also important: in recent online marketing information about heat pumps designed for prospective consumers, optimistic claims are made, for example of 300% [16]. We hope that starting a discussion with pupils about the language used in these adverts and the complexities of home implementation of heat pumps in the context of a classroom scientific investigation will enable them to make informed choices and understand the impact of those choices on the environmental issues they are concerned about. We also hope that an investigation like the one described may support pupil and teacher engagement with climate issues in physics lessons in a way that is related to current and future technological mitigations of the impacts of climate change, empowering children and teachers alike to see the importance and relevance of school physics to the issues that concern them. The current physics curriculum intends to inform and inspire like this, but we argue that that there is a need for it to be reviewed and adapted to recent technological developments and children's changing motivations to learn physics in the context of their concerns about climate change. The experiment we describe here therefore exemplifies a way that a familiar physics concept from the current physics curriculum, efficiency, can be used and extended to address these issues. Limitations of time and resource may currently make investing in similar investigations difficult to justify in tight school physics timetables and budgets, but we suggest that future revisions to the secondary physics curriculum should consider being informed by these ideas as they to respond to pupil interest and national priority. We hope that in describing how to carry out this straightforward and engaging investigation we have demonstrated its feasibility and can start a discussion about how to embed children's interest in climate change more fully in future physics school curricula.

Data availability statement

All data that support the findings of this study are included within the article (and any supplementary files).

Acknowledgments

This Project was funded by a Royal Society Partnership Grant. The authors also wish to express their thanks to Sharon Giles, physics laboratory technician in the school where the project was conducted.

ORCID iD

Daniel Cottle https://orcid.org/0000-0001-5949-6352

Received 5 September 2023, in final form 19 October 2023
Accepted for publication 15 November 2023
https://doi.org/10.1088/1361-6552/ad0d0c

References

[1] Unicef 2022 (available at: www.unicef.org.uk/press-releases/9-in-10-children-are-worried-about-climate-change-finds-new-report-from-votesforschools-and-uk-committee-for-unicef-unicef-uk-2/) (Accessed 18 March 2023)

[2] BBC News 2019 (available at: www.bbc.co.uk/news/av/uk-england-birmingham-47590261) (Accessed 18 March 2023)

[3] Hickman C, Marks E, Pihkala P, Clayton S, Lewandowski R E, Mayall E E, Wray B, Mellor C and van Susteren L 2021 Climate anxiety in children and young people and their beliefs about government responses to climate change: a global survey *Lancet Planet. Health* **5** 863–73

[4] UK Parliament Business 2022 Energy and industrial strategy committee *Decarbonising heat in homes. Seventh Report of Session 2021–22* (available at: https://committees.parliament.uk/publications/8742/documents/88647/default/) (Accessed 20 July 2023)

[5] HM Government 2021 Net zero strategy: build back greener (available at: https://assets.publishing.service.gov.uk/government/uploads/system/uploads/attachment_data/file/1033990/net-zero-strategy-beis.pdf) (Accessed 20 July 2023)

[6] Department for Energy Security and Net Zero 2023 Press release: thousands of heat pump installers to be trained for fraction of the price (available at: www.gov.uk/government/news/thousands-of-heat-pump-installers-to-be-trained-for-fraction-of-the-price) (Accessed 20 July 2023)

[7] Howard-Jones P, Sands D, Dillon J and Fenton-Jones F 2021 The views of teachers in England on an action-oriented climate change curriculum *Environ. Educ. Res.* **27** 1660–80

[8] Department for Education 2015 National curriculum in England: science programmes of study (available at: www.gov.uk/government/publications/national-curriculum-in-england-science-programmes-of-study/national-curriculum-in-england-science-programmes-of-study) (Accessed 20 July 2023)

[9] AQA 2019 GCSE physics (8463) specification. Version 1.1 30 September 2019 (available at: https://filestore.aqa.org.uk/resources/physics/specifications/AQA-8463-SP-2016.PDF) (Accessed 20 July 2023)

[10] The study group on technical aspects of efficient energy utilisation 1975 efficient use of energy *Phys. Today* **28** 23–33

[11] Brown A 1978 A comparison of some alternative domestic energy systems *Appl. Energy* **4** 127–44

[12] (Available at: www.amazon.co.uk/Bestway-Water-Above-Ground-Pools-multicoloured/dp/B09D7KMMBW/ref=sr_1_3?crid=1TT8YQFWNHKHU&keywords=swimming+pool+heat+pump&qid=1693838488&sprefix=swimming+pool+heat+pump%2Caps%2C87&sr=8-3&ufe=app_do%3Aamzn1.fos.42a483c5-1df2-46ee-a728-92d018483bf9) (Accessed 4 September 2023)

[13] (Available at: www.amazon.co.uk/Bestway-BW58386GB-21-Flowclear-Ground-Cleaner/dp/B08P3X2ZRN/ref=sr_1_3?crid=VDWN92A3TFPO&keywords=filter+pump&qid=1693838752&sprefix=filter+pump%2Caps%2C87&sr=8-3) (Accessed 4 September 2023)

[14] Walker J, Resnick R and Halliday D 2005 *Fundamentals of Physics* 7th edn (Wiley)

[15] Chesser M, Lyons P, O'Reilly P and Carroll P 2021 Air source heat pump *in-situ* performance *Energy Build.* **251** 111365

[16] The Eco Experts 2023 (available at: www.theecoexperts.co.uk/heat-pumps/commercial-air-source-heat-pumps) (Accessed 20 July 2023)

Dan Cottle was a secondary school physics teacher in the West Midlands of England for around 15 years before taking up his current post as Associate Professor of Physics Education at the University of Birmingham where he works in widening participation in physics and physics teacher education.

Robert Campbell completed a degree in Nuclear Science and Materials at the University of Birmingham before teaching physics at the University of Birmingham School. He now leads the physics department and also works closely with the University's Department of Teacher Education. Rob was recently made a Senior Teacher Fellow by the Ogden Trust.